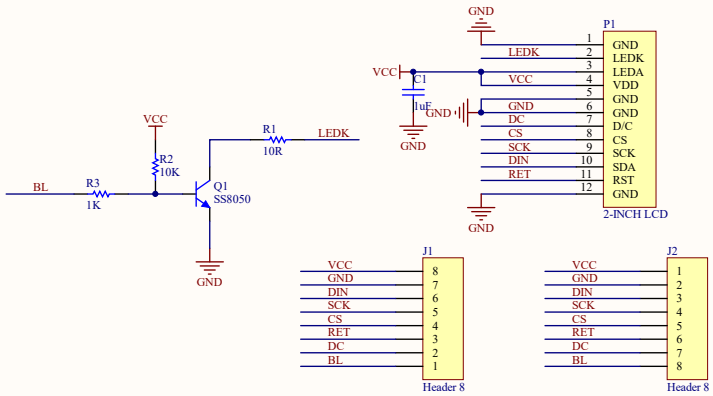

SEENGREAT

peter

					Guangxi Guilin Shengui Science & Technology Co., Ltd	
					TITLE: 2inch LCD	
					DRAWER: Peter	APPROVER: Andy Li
					REV: V1.0	DATE: 27/06/2022
Date	Rev	Change descriptions	Changer	Approver	SIZE: A4_portrait	SHEET: 1/1