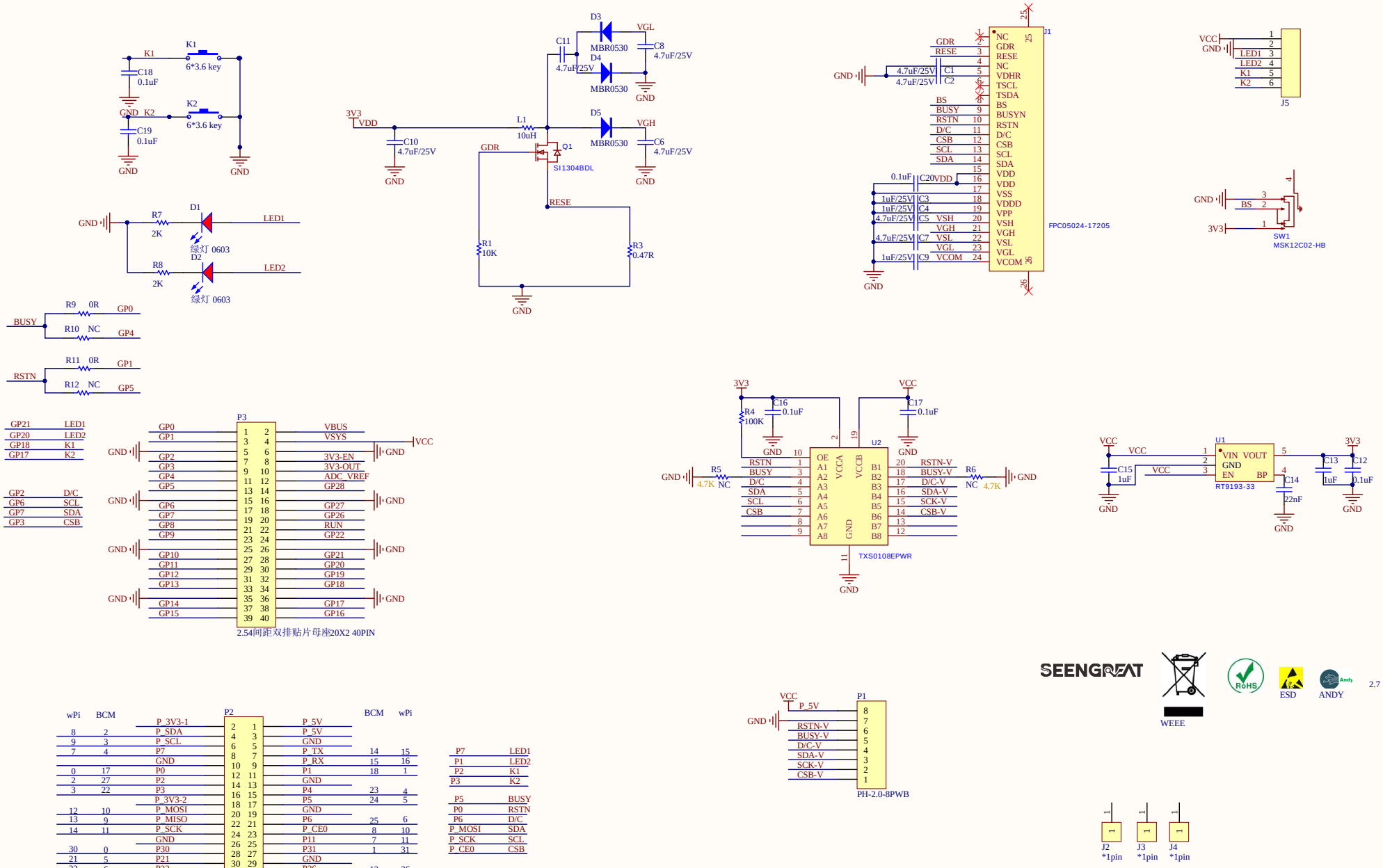

Date	Rev	Change descriptions	Changer	Approver

Guangxi Guilin Shengui Science & Technology Co., Ltd

TITLE: E-paper Universal Model	
DRAWER: Wade	APPROVER: Andy Li
REV: V1.0	DATE: 2024/7/19
SIZE: A3_portrait	SHEET: 1/1