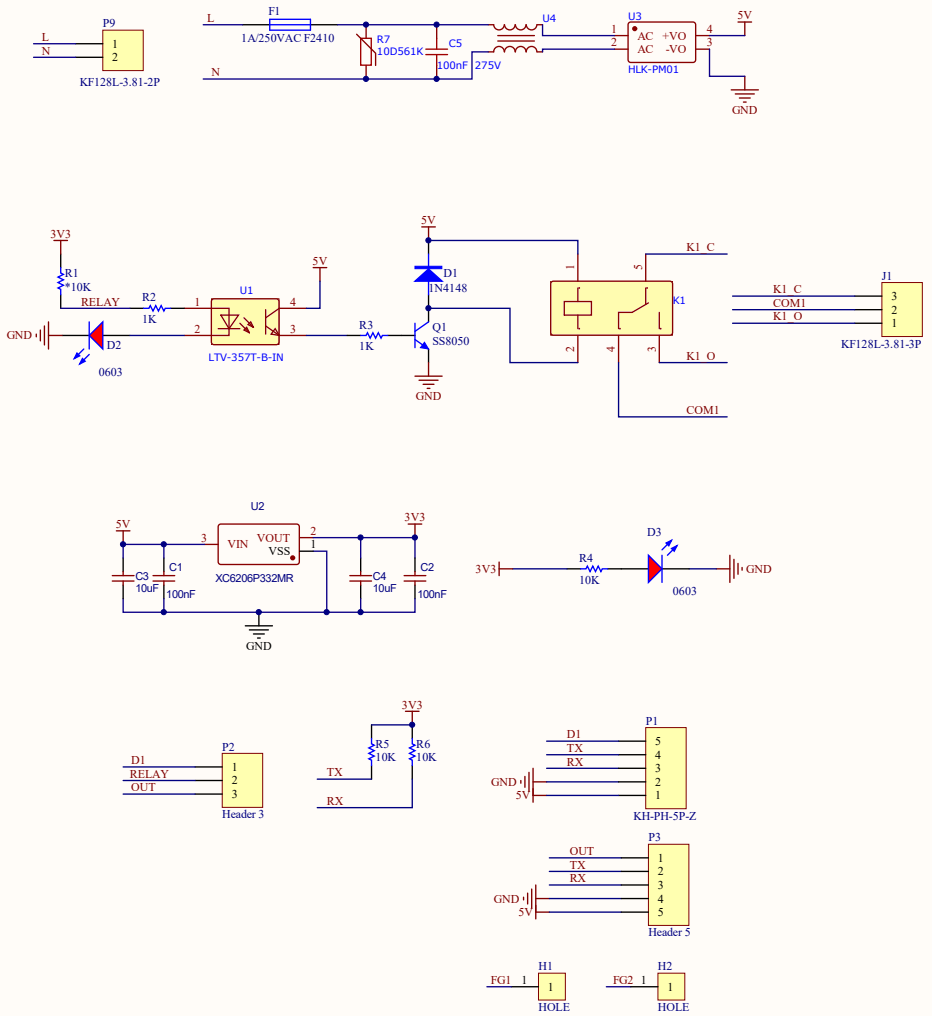

SEENGREAT

					Guangxi Guilin Shengui Science & Technology Co., Ltd	
					TITLE: SG-RELAY-S2410	
					DRAWER: Peter	APPROVER: Andy Li
					REV: V1.0	DATE: 22/11/2022
Date	Rev	Change descriptions	Changer	Approver	SIZE: A4_portrait	SHEET: 1/1